DRAWING MADE IN AMERICAN PROJECTION

©1969 BY AMP INCORPORATED. ALL RIGHTS RESERVED. AMP PRODUCTS COVERED BY PATENTS AND/OR PATENTS PENDING.

THIS PRODUCT DESIGNED AND BUILT BY AMP INCORPORATED. NO LICENSE TO USE THAT DESIGN IN MANUFACTURE, OR TO USE ANY ISSUED OR PENDING PATENTS WHICH ARE INVOLVED, IS IMPLIED.

REVISIONS				
ZONE	LTR	DESCRIPTION	DATE	APPROVED

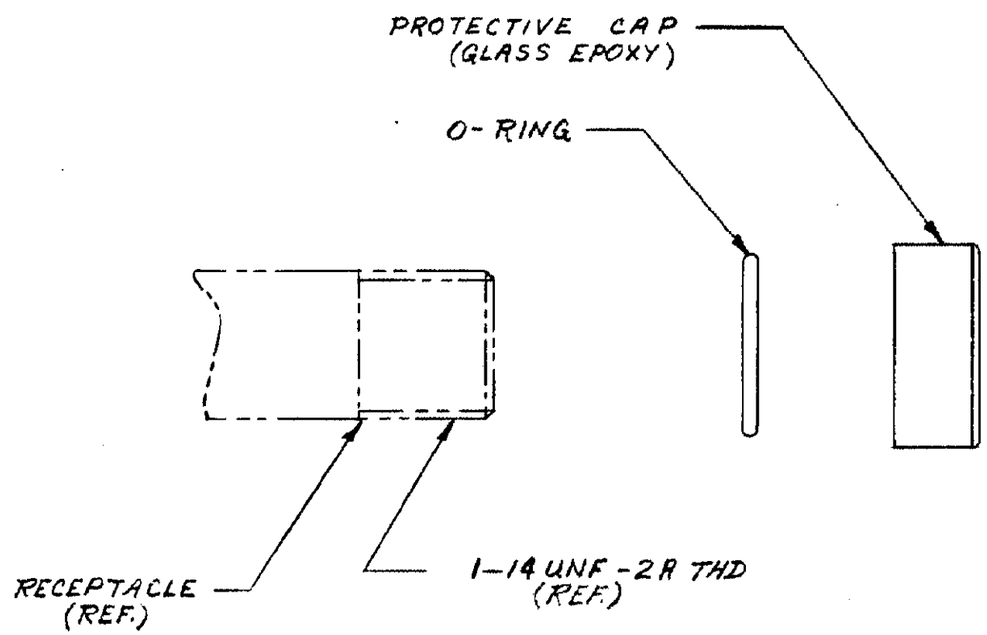

THIS KIT CONSISTS OF THE FOLLOWING ITEMS

1. LGH CAP
2. O-RING
3. INSTRUCTION SHEET.

PART NO. OF THIS DWG — 1

QTY REQD -2	QTY REQD -1	ITEM NO.	DWG SIZE	PART OR IDENTIFYING NO.	NOMENCLATURE OR DESCRIPTION	SYMBOL

PARTS LIST

NEXT ASSY	FINAL ASSY	NEXT ASSY	USED ON
QTY REQD		APPLICATION	

UNLESS OTHERWISE SPECIFIED:
DIMENSIONS ARE IN INCHES
TOLERANCES
.00 = ±
.000 = ±
ANGLES ±

MATERIAL:

FINISH:

CONTRACT NO.
DR 1-10-69
CHK
APPD 1-13-69
APPD
DSGN APPD
OTHER APPD

AMP INCORPORATED
CAPITRON DIVISION
ELIZABETHTOWN, PENNSYLVANIA

NAME
KIT, LGH-4
PROTECTIVE CAP WITH O-RING SEAL

SIZE	CODE IDENT NO.	NUMBER
B	89110	849254

SCALE | WT | SHEET

CUSTOMER DRAWING

AMP 1470 REV 6/66

PRINT SIZE